IEEE

Electromagnetic Compatibility Society

Newsletter

ISSUE NO. 144 WINTER 1990 (ISSN 0164-7644) EDITOR: ROBERT D. GOLDBLUM

REVISION OF MIL-STD-461/2/3: PROGRESS REPORT

The Tri-Service Working Group assigned to the revision of MIL-STD-461/2/3 met in Dayton, OH in November. The meeting proceeded smoothly, and Working Group members were able to accomplish more than had originally been anticipated. Agreement was reached on the revision of Part 1 to MIL-STD-461, on several basic technical issues, and on the agenda for the next meeting. Also several action items were assigned, and controversial issues were resolved. A partial list of some important proposed changes are as follows:

- MIL-STD-463 will be cancelled. Definitions not contained in the IEEE Directory of Terms and Definitions will be placed in Part 1, Paragraph 3.0 of MIL-STD-461. ANSI will be requested to volunteer its support by researching, updating, and finally recommending exactly which definitions should be contained in MIL-STD-461.

- An appendix will be prepared for MIL-STD-461 containing the rationale underlying the applicability of requirements. This proposed appendix is intended to assist procuring activities in the "tailoring" process and to provide an historical basis for future revisions.

- Line Impedance Stabilization Networks (LISNs) will be used for conducted measurements. The LISNs will contain a 5 μh series inductors and a shunt 0.1 μf feedthrough capacitor between line and receiver port. (See figure on page 3.) The impedance of the LISN will be specified along with a calibration method. Calibration will be in accordance with MIL-STD-45662A, and impedance curves will be required in the test report. In order to eliminate the effects of shielded room filters and other power source impedance parameters, a 10 μf capacitor will be placed between the LISN and the power source. For DC power, a 30,000 μf will be used between the lines.

- EMI receivers will have defined minimum bandwidths as proposed by ANSI, and one set of limits will be established for both broadband and narrowband interference. The use of receiver bandwidth correction factors will not be allowed.

- Conducted susceptibility requirements are needed for application to power supply output lines.

(continued on page 3)

IEEE ELECTROMAGNETIC COMPATIBILITY SOCIETY NEWSLETTER is published quarterly by the EMC Society of the Institute of Electrical and Electronics Engineers, Inc., 345 East 47th Street, New York, NY 10017. One dollar ($1.00) per member per year (included in the Society fee) for each member of the EMC Society. Second-class postage paid at New York, NY and additional mailing offices.

4181178 M 27N
DONALD L SWEENEY WTE 6
1403 HUNTINGTON DR
GLENVIEW IL 60025

NEWSLETTER STAFF

EDITOR

Robert D. Goldblum
R & B Enterprises
20 Clipper Road
W. Conshohocken, PA 19428

ASSOCIATE EDITORS

CHAPTER CHATTER
Charles F. W. Anderson
2302 Keener Road
Hagerstown, MD 21740

EMC PERSONALITY PROFILES
William G. Duff
Atlantic Research Corporation
5390 Cherokee Ave.
Alexandria, VA 22314

ABSTRACTS
William H. McGinnis
Southwest Research Institute
P.O. Drawer 28510
San Antonio, TX 78284

PHOTOGRAPHER
Fred J. Nichols
LectroMagnetics, Inc.
6056 W. Jefferson Blvd.
Los Angeles, CA 90016

EMC STANDARDS ACTIVITIES
Herbert Mertel
EMACO, Inc.
P.O. Box 22066
San Diego, CA 92122

EMCS EDUCATION COMMITTEE
Dr. Clayton Paul
Dept. of Electrical Engineering
University of Kentucky
Lexington, KY 40506

EMC-S BOD ACTIVITIES
Donald N. Heirman
AT&T Information Systems
Crawfords Corner Rd.
Building 4-112
Holmdel, NJ 07733

POINT AND COUNTERPOINT
Anthony G. Zimbalatti
294 Crowell St.
Hempstead, NY 11550

PAPERS, ARTICLES & APPLICATION NOTES
Edwin L. Bronaugh
The Electro-Mechanics Company
P.O. Box 1546
Austin, TX 78767

INTER-SOCIETY ACTIVITIES
Donald A. Weber
Hamilton Engineering, Inc.
2108 S.W. 152 Street
Seattle, WA 98166

PCs FOR EMC
Edmund K. Miller
Group MEE-3, MS J580
Los Alamos National Laboratory
P.O. Box 1663
Los Alamos, NM 87545

EMC CERTIFICATION & ACCREDITATION
Russell V. Carstensen, P.E.
Naval Air Systems Command
AIR-5162, Room 902
Washington, DC 20361

PRODUCT SAFETY
John McBain
Hewlett Packard
19447 Pruneridge Ave.
Cupertino, CA 95014

REQUEST FOR BACK ISSUES

The EMC-Society Board has directed that a microfilm record be made of the Society's Newsletters back to the beginning when it was known as "Quasies and Peaks." Through the help of Bob Haislmaier and Charlie Anderson we now have most of them. However, we still have some gaps. If you have any of the missing issues, would you please loan them to me long enough for copying? The missing issues are:

IRE PG RFI Newsletters:	Issues Number - 3, 4, 7, 11, 27 and 28
IEEE PG EMC Newsletters:	Issues Number - 30, 33, 34, 35, 38, 40, 41, 42, 46, 47, 53, 61, 70, 71, 73, 90, 93, 94, 95, 96, 97 and 99
IEEE EMC-Society Newsletters:	Issues Number - 117, 142 and 143

If you have any of these, please send them to:

Dr. Chester L. Smith
2 Jonathan Lane
Bedford, MA 01730
Telephone: (617) 271-7086
FAX: (617) 271-2271

The major focus of the next meeting will be Table 1-I of MIL-STD-461C, Part 1. Each test requirement will be examined as to need, application, and the advisability of retention. For instance, it has been proposed that requirements CS03, CS04, CS05, and CS07 be deleted. An alternate proposal would require an update if these requirements are retained. A further proposal includes the deletion of CS06 and RS02 with the mandatory application of a combined requirement consisting of CS10, 11, 12, and 13. For some applications, current drive cable tests will be considered to replace RS03 tests below 30 MHz; and some tests will be removed from the confines of shielded enclosures.

Studies are currently underway to assess the effects of these changes. However, comments and recommendations from other Navy activities involved in the use and application of MIL-STD-461/2 are still needed. Specific questions which must be addressed in addition to the proposals listed above include:

- Are CE01 and CE03 tests still required? Exactly what is the rationale for these requirements and when should they be applied?
- Are RE01 and RS02 tests still required? If so, with what justifications?
- Are CS10 and CS11 test methods adequate replacements for CS01, CS02, CS06, and RS02 test methods?
- Are RE02 transient measurements required? If so, should test methods be improved and should the test be performed in the time domain?

Answers to these questions and other comments should be forwarded to the designated liaison: Dr. Ralph Showers, University of Pennsylvania, M/S 6390, The Moore School of Electrical Engineering, Philadelphia, PA 19104.

A question and answer forum will be conducted at the 1990 EMC-S Symposium in Washington, DC on Wednesday, August 22, 1990. A panel consisting of representatives from the Army, Air Force and Navy will field your questions and concerns about MIL-STD-461/2 revisions. More details will be provided in the next issue of this *NEWSLETTER* and in the symposium's program.

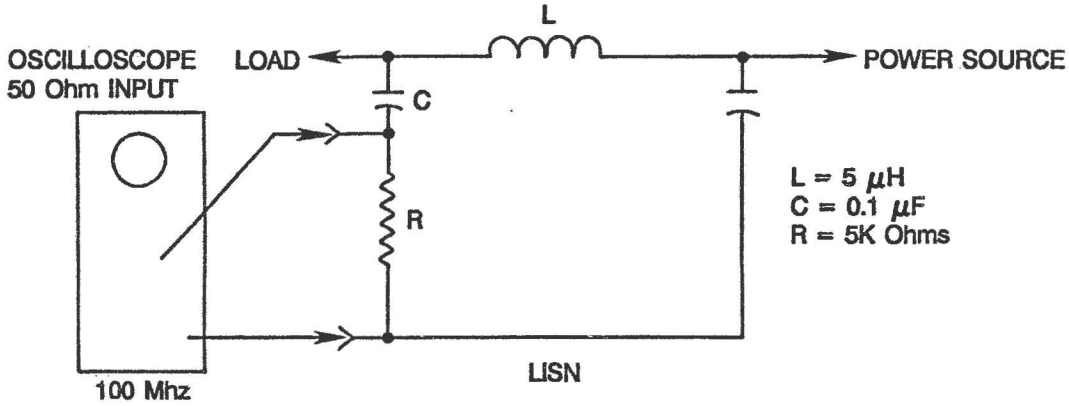

NOTICE FOR EMC-S SYMPOSIUM EXHIBITORS

A priority point system has been established for the assignment of booth space at IEEE EMC-S annual symposiums. This system counts the participation of the exhibitor over past years by assigning one point for each year of participation and one point for each booth. Thus, an exhibitor who participated in the 1988 and 1989 symposiums with two booths at each would have accumulated six points. This point system becomes important when limited space or limited priority space is available. If an exhibitor misses a symposium, he loses all accumulated points.

The system will be first implemented in the assignment of exhibit space at the 1991 Symposium in Cherry Hill, NJ. However, companies that do not exhibit in the 1990 Symposium to be held in Washington, DC this August will lose all accumulated priority points. This program will be continued in the future under the approval and direction of the EMC-S Board of Directors' Symposium Committee.

PRESIDENT'S MESSAGE

CHANGE OF THE GUARD

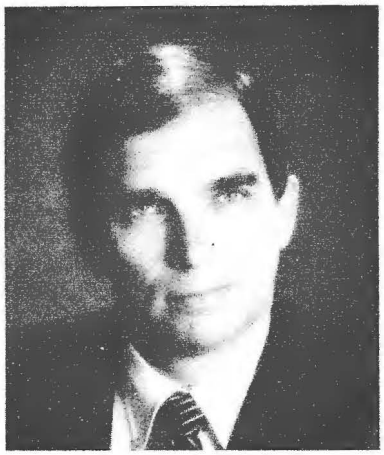

from Donald E. Clark

My tour of duty as President of the EMC Society ended this past New Year's eve at the stroke of midnight. It has been a privilege to have served over the last two years and to have been associated with the professional group of people who make up the EMC Society. Admittedly, it has also been a challenge to balance family, job, and Society activities and to do a reasonable job with all three. However, reflecting back, I truly value the experience and the opportunity to have broadened my horizons.

The President's gavel has moved to Mr. Ed Bronaugh who has served so ably as Vice President. Ed is a widely recognized professional within the EMC community, and undoubtedly he will do a fine job. Ed and his Board will bring new ideas and a renewed vitality to the Society.

As is traditional for an outgoing President, I would like to thank everyone for their support and to reflect on the accomplishments of the last two years. The President of an organization always has high expectations that all objectives and goals will be met. Our sights were set high, and we did a reasonably good job in most areas. In other areas, we provided a road map for the future. Much of the credit for our accomplishments goes to the Society's officers and service directors who provided leadership and much needed support. The committee chairmen must be thanked for attending to the many detailed activities required on a day-to-day basis. The chapter chairmen, who toil at the "grass roots" level, are appreciated for their vital local support. Lastly, thanks must go to the membership-at-large who attended local meetings, attended symposia, wrote technical papers, and participated on committees. An organization is only as good as its people, and our Society is fortunate in this respect. Now, let's review our Society's accomplishments over the last two years.

Ed Bronaugh, who has served as Vice-President over the past two years, provided long-range planning for the Society. Ed contributed by providing innovative ideas. For example, he suggested the reorganization of committee representatives under a Representative Advisory Committee with a central advisor to coordinate activities. We thank Ed for his contributions: his long-range planning will surely carry over into his term as President.

Janet Nichols O'Neil has served as Secretary for the last two years. Two years ago she was new to the Board and took on the pressing duties required of a secretary. Janet has done an excellent job, and I am grateful for her making my job easier. Janet is following in the footsteps of her father, Fred Nichols, who has contributed to the Society over many years.

Our Treasurer Dick Ford has served in his office for the last four years. Dick has developed computer spreadsheets to track the Society's finances and to provide graphical reports. Also Dick has implemented a word processing program with an overhead projection display to record in real time the Board of Director's motions, action items, and order of business. At the end of a meeting, we are now able to provide each Board member a printout of action items so work can begin immediately. Over the last two years, I have not had to be concerned with the finances with Dick in charge, and I thank him for this excellent support.

Len Carlson, Past President, has given me much encouragement and guidance. I am grateful for his kind support. During 1989, Len completed his first year as the Director for Division IV, which is a very demanding position. Len still found time to serve as the Chairman of the EMC Society's Nominations and Bylaws Committees.

Gene Knowles, the senior statesman of the Board of Directors, has served as the parliamentarian at the Board meetings, and he has kept us on track in accordance with *Robert's Rules of Order*. Gene also served as an advisor, and I appreciate his enthusiastic support.

The Director for Communication Services Bob Haislmaier has served for two years. Dr. Haislmaier has brought considerable professionalism to the Board, and this professionalism has carried over into the Society's *Transactions*, *NEWSLETTER*, and Symposia. Dr. Motohisa Kanda, Edi-

tor of the EMC *Transactions*, has done an outstanding job, and he has continued the excellence we grew to expect from his predecessor Dick Schulz. Gene Cory continued his long-term contributions as the Chairman of the Symposia/Conference Committee. Gene prepared a "Symposia Guidance Handbook" which will aid future symposia committees. Gene has scheduled symposia up through 1996 and has provided the groundwork for co-sponsorship of symposia in Beijing during 1992 and in Sendai, Japan in 1994. During the last two years, symposia were held in Seattle, Denver, and Nagoya, Japan; and these symposia were chaired respectively by Don Weber, John Adams, and Yasuo Akao. We do appreciate the fine efforts of these three gentlemen. Bob Goldblum, Editor of the *EMC-S NEWSLETTER*, continues to provide a quality product; and we appreciate his efforts and those of his Associate Editors. Dr. Chet Smith, the new Chairman of the History Committee, is now actively converting all the past *NEWSLETTERS* to microfiche for our Society's archives.

Don Heirman, Director for Technical Services, has been a real "dynamo" on the Board. Not only is he a Service Director, but he also serves as the Chairman of the Standards Committee and as the General Chairman for the 1991 symposium to be held in Cherry Hill, New Jersey. Don's Standards Committee has twelve standards or project authorization requests which are in various stages of presentation. Dr. Clayton Paul assumed the chairmanship of the Education Committee following Henry Ott's long tenure as chairman. Dr. Paul has done a great job in EMC education and in coordinating the Education Committee activities. Dave Hanttula serves on the Education Committee as the Chairman of the Society's Distinguished Lecturers Program. Under Dave's guidance, the Lecturers Program is becoming more widely recognized and utilized. Other Education Committee activities include the publication of an "EMC Experiments and Demonstrations Manual" for use in university laboratories and the preparation of an EMC bibliography which is being coordinated by Kimball Williams. The Technical Advisory Committees, under the direction of Wilf Lauber, continued to review symposia technical papers; and several of the committees sponsored highly successful workshops during the Seattle and Denver Symposia. A new Technical Committee for Product Safety has been formed and is under the chairmanship of Rich Pescatore. Dr. Andy Farrar is the advisor for the new Representative Advisory Council (RAC). He has established the RAC organization and is preparing committee charters.

Bob Hofmann, the Director for Member Services, has served two years. Bob has maintained and periodically updated the Society's Directory, a vital tool for efficient communication among officers, directors, and chairmen. Charlotte Tyson chairs both the Awards and Membership Committees and has done an outstanding job on both committees. Over the last year, our Society's membership increased by 350 members for an overall growth of 11 percent. Our Society ranked 4th out of 35 societies in terms of membership growth. Dan Hoolihan is the Society's Chapter Coordinator. Dan has worked closely with the chapter chairmen and has arranged Chapter Chairmen Breakfast meetings at the Seattle and Denver Symposia. During the past year, new EMC chapters were formed in Ottawa under Chapter Chairman Jacques Rollin and in Paris under Chapter Chairman Ferdy Mayer. A petition for a new chapter in Switzerland has been submitted, and this chapter should be approved in the near future. Other members are investigating a new chapter in Sweden. Charlie Anderson, Chairman of Chapter Publicity, continued his fine job of keeping us informed about chapter activities through his articles in the *NEWSLETTER*. Bud Taggart, Chairman of the new Fellows Search Committee, and Dr. Bill Duff, Chairman of the Fellows Evaluation Committee, have identified and evaluated highly qualified Fellow candidates. Our Society's Fellow membership has increased significantly under their leadership. Jim Mucciolli is the Chairman of the new Student Activities Committee. Jim is organizing his committee, and he has some great ideas. Undoubtedly, our Society will have more interactions with students in the future.

Walt McKerchar, Director for Professional Services, has completely reorganized and revitalized his directorship by reactivating committees and by adding new ones. We all must be grateful to Walt for his contributions over the last two years. Bill Johnson, Chairman of the Employment Analysis Survey conducted annually at the symposia, has completed the survey conducted at Denver. Bill has prepared the survey results in a very comprehensive manner, and the results appear on page 17 of this *NEWSLETTER*. Don Weber is the Chairman of the revitalized Intersociety Relations Committee. Don has attended meetings of the EMC Committees of the EIA and SAE and has reported on their activities. Don is also keeping us informed by publishing intersociety articles in the *NEWSLETTER*. Gerry Rothhammer chairs the Public Relations Committee. Gerry's committee published and distributed an EMC Society brochure which informs potential members and the general public about the Society's purposes and activities. This committee is also sponsoring a contest to select a logo for our Society. Gerry did a great job promoting the EMC Society at the Zurich and Nagoya Symposia membership booths. Herb Mertel, Chairman of the Transnational Committee, promoted our Society on the international level. He organized the Zurich and Nagoya Symposia membership booths. Herb also made arrangements to exchange symposium records with the Wroclaw Symposium Committee and is working with the United Kingdom IEEE EMC Symposium Committee to exchange records. Al Mills is the Chairman for the EMC Society's committee under the IEEE Professional Activities Council for Engineers (PACE). Al attended the PACE Workshop in Burlington, Vermont held this past Labor Day weekend. Al is organizing the PACE activities for our Society, and he will keep us informed about future PACE activities. Bob Brook is our representative to the IEEE Society on the Social Implications of Technology (SSIT). Bob has attended the SSIT meetings and has kept us informed about SSIT's activities and concerns.

Again, I am grateful to everyone who has served the Society. A new year has begun. Let's now look forward to the 90's!

POINT AND COUNTERPOINT

STILL THE SILENT CRISIS SCREAMS

by Anthony G. Zimbalatti

In the 1989 spring issue of this *NEWSLETTER*, I cited several examples of electromagnetic interference (EMI) which have caused operational problems in military systems, mission degradation, loss of aircraft and a ship, and tragic loss of life. I identified several contradictory requirements to system procurement specification MIL-E-6051D, and I emphasized the need for reforms. Certainly reforming MIL-E-6051D, "Electromagnetic Compatibility Systems" would help to alleviate "the silent crisis" -- the descriptive term coined for this ongoing problem. Last fall I discussed needed reforms and the problems posed in defining the external electromagnetic environment (EME) requirement of this specification. Here, I'll discuss several reforms needed if MIL-E-6051D were to be imposed correctly in the procurement process for a system -- *e.g.* one hundred new aircraft.

First and foremost, preliminary studies for establishing the operational requirements for these aircraft would include an EMC study. This study would define the aircrafts' operational EME, and 6051 would be applied accordingly. In short, requirements would be tailored to achieve several objectives. Each aircraft during its checkout, test and operational missions would exhibit internal EMC and EMC with the other ninety-nine aircraft. This requirement would take into consideration both spatial and temporal operational relationships among all the aircrafts. Also the EMC study would include definitions for both natural and manmade EM environments that the aircraft would encounter from buildup through deployment. These definitions would cover all sources of EM energy which these aircraft might encounter. Sources would include ground, water, air and space-based systems; lightning; frictional charging; electromagnetic pulse; nuclear particles; etc. Finally, the EMC study would define the levels of permissible EM emissions from the aircraft so that they would not cause unacceptable performance degradation in other manmade equipment, in systems, or in the ambient electromagnetic environment.

When the study is complete, the organizations involved may have varying "tailored" requirements for specification 6051. The **optimum** requirements must be chosen, and this selection process would require trade studies to pinpoint risks, costs, technology development, and other parameters. Only after this information is obtained, could the optimum 6051 procurement requirements be established.

I believe that the aforesaid approach can be achieved, but there are several interesting challenges. For example, the life cycle of our hypothetical one hundred aircraft could be twenty years or more. A provision for continuing EMC studies would be necessary and would include ongoing assessment of operational usage, manmade systems and the natural EM environment. Significant problems with the EMC study could arise with manmade systems, with the use of so-called Government Furnished Equipment, and with the EMC requirements of existing GFE forming part of the one hundred aircraft.

EDITORS' DEADLINES

The essential ingredient of a newsletter is informative and *timely* content. Mailing this NEWSLETTER and current information to all Society members depends upon prompt submission of all articles and features. All Associate Editors are reminded that the submission deadline for the Winter 1990 issue of the *IEEE EMC Society NEWSLETTER* is **March 15, 1990.**

PCs FOR EMC

COMPUTER LANGUAGE DEBATE CONTINUES

This issue's column again features reader contributions regarding the choice of computer languages.

by Edmund K. Miller

Don't Drop FORTRAN

Dr. Johnson J. H. Wang, Georgia Tech Research Institute Atlanta, GA 30332.

[The following remarks from Dr. Wang express ongoing concern over the prospects that FORTRAN might slowly disappear from the engineering scene, from his perspective about the role of FORTRAN in EM computations.]

"Dr. Excell's letter in an earlier issue of this column reporting and protesting the dropping of FORTRAN and its replacement with Pascal or C in many undergraduate curricula in the UK is truly interesting and alarming. In a 1988 issue, Dr. Jerry Raines also vigorously trumpeted his 'defense of FORTRAN.' Obviously some decision-making people envision and perhaps plan the disappearance of FORTRAN in the near future.

"I share the views of Drs. Excell and Raines. As the author of a forthcoming book, *The Generalized Moment Methods in Electromagnetics -- Formulation and Computer Solution of Integral Emissions,* to be published by Wiley, I naturally have a strong opinion on this issue. Since Drs. Excell and Raines have stated our case very well, I will only cast my vote for them and speak from a different angle.

1. Many serious deficiencies of Pascal have been pointed out by W. H. Press, et al. (*Numerical Recipes - the Art of Scientific Computing*, Cambridge University Press, 1986), who remarked that Pascal 'is not at present (early 1985) a better language for serious numerical work overall' (p. 673).

2. The experience and perceptions regarding programming are vastly different between scientific and non-scientific programmers. Because the output of a specific program is numerical, program failures are clear and visible. For other programs, failures are generally more graceful and less visible. It is extremely difficult to develop an electromagnetics code of over, say, 300 lines. In fact, code development efforts often fail totally, and many codes pronounced working have remaining bugs to be discovered years later. As a result, I devote two pages of my book to a "mule theory" claiming that the successful electromagnetics code developer must have the surefootedness of a mule, not the pep and spirit of a racehorse. Non-scientific programs such as word processing software, video games, etc. can generally be developed and accepted without catastrophic failure. I know many teenagers who without formal training in computer programming developed sophisticated non-scientific programs. (My son, John, is an example.) Many of the non-scientific software (e.g. the word processing and network communication software on our campus) have bugs but are acceptable to users. I think whoever is deciding on dropping the FORTRAN course should understand the experience and viewpoints of the scientific programmers before making a costly and unwarranted change."

Why Not Consider APL?

Professor Douglas B. Miron, South Dakota State University, Brookings, SD 57007-0194.

"Pros and Cons of Commercial Software, Appendix B.1" from his book *Design of Feedback Control Systems*, HBJ Technology Press, 1989.

[Professor Miron of South Dakota State University offers some provocative observations gleaned from his experience in developing programs for feedback control systems.]

"Before the advent of the personal computer, we working engineers used either a mainframe computer or a tabletop system. In the former case, a few general-purpose software packages were available, but most of us just wrote our own programs, usually in FORTRAN. In the latter case, some software was available either free or at a nominal cost from the machine's manufacturer. Again, most of us just wrote our own programs, either in a machine language or in BASIC. I've been told recently that there is a catalog listing over 3,500 software packages for engineering use to run on PCs. Documentation has changed too. When I learned PL/1 in 1975, I did it with a manual about half an inch thick. Now, no self-respecting software publisher would sell a package with fewer than 300 pages of documentation, most of which you will never want or need to read. Even so, the amount of learning you will have to do is on the order of learning a new programming language. A user should seriously consider the effort involved before committing money and time to a new software package. For a specialist who can foresee very frequent use of a package, an investment is very clearly justified. For a generalist, on the other hand, the investment is seldom rewarded in even

(continued)

the medium term. In my own case, I use two products, a word processor and an APL interpreter.

"I am a generalist, and candidly I have a bias against canned software. I have seen some products that produce very nice displays and have tried out some which claimed to be very user-friendly, but I've always been put off by the size of the manual I would have to wade around in if I bought it and by the low use rate I know the package would actually get. The advantages of writing one's own programs include control over the models, continued use of the language already known, and the formation of one's own set of utilities which can be used in the solutions common to many problems, such as complex arithmetic, two-port parameter manipulations, or plotting functions. These will form your own personal set of utilities from which you can draw to make solution of new problems easier.

"To achieve these benefits though, sufficient documentation must be created so that a program can be used again months later. The documentation can be on paper or in comments in the source code. It is ABSOLUTELY ESSENTIAL. Another very important point is this; whichever language is selected, choose an implementation that allows pixel-level plotting. The most important contribution PCs have made is affordable computer power to support a large percentage of our daily professional needs. The second most important contribution is the general availability of good screen and printer plots. The graphical presentation of results with 200 or more points per curve is a tremendous aid to our understanding and presents opportunities that would have been missed with line-printer-style character plots or tables or a few performance figures.

"I want to make a special case for learning APL, even though everyone has probably already learned at least one other programming language. The other languages I have learned or looked at all seem to me to be first or second-level mnemonic covers for the computer's operation. Languages above Assembler are supposed to be architecture-independent, but one is very aware of storage requirements when declaring data types and dimensions. One is also very aware of the fact that operations are done on one datum at a time. Finally, the functions defined in the languages have one or two scalar arguments.

"These languages are like the machines themselves, essentially oriented to do arithmetic in either the numerical or logical sense. It's as if these languages never went to college. APL originated with an effort to regularize the use of functional symbols in mathematics. As such, its defined operators not only operate on scalars but also on vectors and arrays. Furthermore, the nature of an operand doesn't have to be predefined by the user. The interpreter checks to see what kind of data was assigned to the operand and allocates storage accordingly. No explicit data type or array dimensions statements are required. Most important, a whole new class of operators is given for use on vectors and arrays. I like to impress people by telling them that matrix inverse is only one keystroke in APL. Actually, I use matrix inverse rarely in comparison to the other array functions. An operator one ordinarily wouldn't think of is the compression operator, /. The division symbol is ÷. A<-+/B means 'A is assigned the sum of the elements in each row of B.' The plus sign can be replaced by an arithmetic operator, and the result is as if the operator were inserted between each element of a row of B and the operation were performed sequentially along the row. In addition, A<-C/B, where C is a vector of 1 and 0 elements which amounts to, 'Pick out the elements in B that line up with the '1's and C and throw away the rest, and assign the result to.' Thus C is a selection vector. C can be formed as the result of a logical test on the elements of B. For example, C<-2≤B or 'If an element in B is not less than 2 (the test is true) put a 1 in the corresponding element of C. If the test fails, put a 0 in that element of C.' Thus, not only are there generalized versions of the operators you are familiar with, such as various kinds of transpose and rotation, taking and dropping of rows and columns, inner and outer products, but there are operators for things that you do but don't have symbols for, such as reshaping an array, sorting, and assembling arrays from smaller arrays or vectors or scalars.

"The operators have significant effect; they make the interpreted program go much faster than, for example, interpreted BASIC. Execution is not as fast as for a compiled program, but fast enough to give that interactive feeling. The array operators give one new ways of thinking about how to solve problems. As an example of the short development time, a few months back I wanted to try out some ideas about multichannel filters on some simple filter structures. I didn't have a workspace for general network analysis, so I had to choose between learning to use a PC version of SPICE or writing a new workspace. I ran the sample SPICE program, discovered that I would need an ASCII editor to enter data to it, didn't like the character-plot output, didn't like the somewhat elaborate element description, and decided I'd make my own.

"It is so much faster to work in APL than in the primitive languages that I have come around to a new point of view. I believe the only people who should study the primitive languages are computer scientists and systems programmers. All the rest of us who just want to use the computer should learn only APL. The argument for FORTRAN has often been, 'There's so much already invested in FORTRAN programs, people have to learn it.' I propose that if a program has a good user interface, it isn't necessary to learn the underlying language. If the program is becoming obsolete, far less effort would be expended in rewriting its function in APL than in going in and modifying the old program. APL is that good. A lot of time and money have been wasted by not using a college-level language in our professional practice."

EMC CERTIFICATION AND ACCREDITATION

PROGRESS REPORT

by Russell V. Carstensen
Certified EMC Engineer

The concept of third party certification of personnel and accreditation of EMC test laboratories was imposed Navy-wide in March, 1989 by the Chief of Naval Operations. Assignment of responsibilities for development and implementation of EMC engineer and technician certification was assigned to the Naval Air Systems Command (NAVAIR).

NAVAIR complied in May, 1989 with the issue of NAVAIR Instruction 2410.1D. This instruction requires that engineers and technicians certified by the National Association of Radio and Telecommunications Engineers (NARTE) be in responsible charge of work in both public and private facilities. It further requires the accreditation of EMC test laboratories by the National Institute of Standards and Technology as structured by the National Voluntary Laboratory Accreditation Program. The Instruction stipulates full implementation beginning 17 November 1989 -- *i.e.* six months after issuance. The other systems commands have elected to observe NAVAIR's pilot program before deciding on their approach. However, the certification and accreditation requirement applies Navy-wide.

As of mid-October, 1989, there have been 1,250 applications for EMC certification issued either in response to direct request or at national EMC symposia. Out of these, 408 forms (from 309 engineers and 99 technicians) have been completed and returned to NARTE for processing. It is expected that most of these applications will result in certification. Thus far, all applications have been for certification of current practitioners by eminence -- the so-called "grandfather" clause. At this point, the time period for certification by eminence has half run. Also all new procurement documents must now contain clauses for the use of accredited laboratories for final acceptance testing and for responsible charge by NARTE-certified personnel. The labor pool of certified personnel has been growing steadily and is now more than sufficient to meet the needs of NAVAIR.

Thirty-two laboratory assessors have been trained to support the NIST NVLAP for EMC testing. Laboratories will be assessed in groups so as to prevent any unfair competitive advantage falling to those labs assessed first. All assessors are EMC engineers and technicians with hands-on experience in MIL-STD-462 testing. Assessor applicants were screened carefully for **adequate** and **specific** experience. Currently the first group of laboratories is being scheduled for assessment.

It is noteworthy that applications for certification have been received from contractors supporting Navy programs other than NAVAIR's. It would appear that the contracting community is pursuing EMC certification seriously. Staff from other system commands have not been as quick to enter the certification process, and this hesitance could lead to a situation where the contractor is better "credentialed" than his government counterpart. Consequently, technical discussions and exchange could become more difficult. Perhaps the ongoing need for clarity in communication was one consideration when the Chief of Naval Operations requested each system command to provide their own plan for implementation of the certification and accreditation process developed by NAVAIR.

It was expected that requests for qualification by examination would follow the wave of grandfather applicants by about nine months to a year. Understandably applicants might want a period of "refresher" training and study before sitting for the examination, and events seem to confirm this assumption.

Also a conduit for career development has been created while the creation of an artificial shortage of qualified practitioners has been avoided. Once the grandfather window closes, attrition will be offset by candidates who elect to sit for the examination. This "rite of passage" should be no more difficult than learning the EMC business. In fact, the existence of specific examination content should make entry into the field easier by lending focus where none had existed previously.

Finally, one must assess overall support for the program. Although it is not widely recognized, government personnel move from job to job much like their counterparts in the private sector; and many of the team who pressed for EMC certification and accreditation have been reassigned. I have

(continued on page 12)

BOD ACTIVITIES

BOARD OF DIRECTORS MEETING IN TARPON SPRINGS

by Donald N. Heirman

The third and final meeting of 1989 was held between 9:30 a.m. and 5:00 p.m. on November 13, 1989 at the Innisbrook Hotel in Tarpon Springs, FL in conjunction with various IEEE board and committee meetings. Board members present included Don Clark, Ed Bronaugh, Janet O'Neil, Dick Ford, Bob Haislmaier, Don Heirman, Bob Hofmann, Dan Hoolihan, Al Mills, Bill Duff, and Len Carlson. Absentees were Charlotte Tyson, Gene Knowles, Herb Mertel, Chet Smith, Henry Ott, Dick Schulz, Gene Cory, Don Weber, and Walt McKerchar.

After approval of the agenda, President Don Clark introduced the officers, who presented their reports. Don indicated that last September Ed Bronaugh, Gene Cory, Len Carlson, and he had attended the EMC Symposium in Nagoya, Japan as representatives of the Board. Len Carlson then announced the names of the new Board members whose terms will conclude December 31, 1992. Congratulations were extended to Joe Butler, Don Weber, Warren Kesselman, Pat Coles, Walt McKerchar, and Dave Staggs. Their terms commenced on January 1.

Secretary Janet O'Neil reviewed the minutes from the May 22, 1989 meeting. After minor modifications, the minutes were approved.

Treasurer Dick Ford presented his report. As of August 30, 1989, the Society's net worth was $299.3 K, down from $320 K on October 31, 1988. Heavy expenses were incurred in distributing records of the Denver Symposium. New officers will discuss halting this downturn trend during 1990. The Treasurer's Report was approved.

The Board approved changes to the Bylaws which will bring them in line with current practices. These changes will be published in the *EMC-S NEWSLETTER*. Comments should be forwarded to Len Carlson at (206) 773-6297.

The remaining items discussed were as follows:

1. Director Bob Haislmaier (Communication Services) presented his report. Bob noted that Dr. Charles Goldblum has been appointed Associate Editor for Book reviews appearing in the *NEWSLETTER*. Moto Kanda, *Transactions* editor, has received Board approval for a special edition focusing on high power microwaves. Bob then relayed Gene Cory's report on symposia. He noted that Hugh Denny of Georgia Tech Research Institute will be replacing Gene as Chairman of the EMC-S Symposium and Conference Committee. Bill Duff reported that for the coming 1990 Symposium in Washington, DC, 141 papers have been submitted -- an unusually high number. Approximately 160 booths should be sold. The 1991 Symposium Committee submitted their initial budget, and the Board approved it as submitted. The 1992 International Symposium is now slated for spring in Beijing. The Board approved a motion that includes the cost of providing free symposium records to all EMC-S members in all future symposia budgets. This provision does not include student members.

2. Chester Smith reported that the EMC-S History Committee is proceeding to microfilm past editions of the *NEWSLETTER*. The Board had approved this expense in a previous session.

3. Director Don Heirman (Technical Services) submitted his report. Four balloting members of the EMC-S Standards Committee have resigned. Replacements are being sought. With the approval of the Committee, Dan Traver of Sony, San Diego has replaced Sal Gentile. Rick Tell, Chairman of PAR 1140 Working Group on Near Field Measurements has been replaced by Dheena Moongilan of AT&T Bell Labs (201-834-1806). The Standards Committee is also stepping up its review of Standard 299 as there is considerable pressure for making 299 a suitable replacement for MIL-STD-285. Ed Bronaugh and Gene Knowles are working on this update.

4. Don then presented Dr. Clayton Paul's report. Clayton has succeeded Henry Ott as Chairman of the Education Committee. A copy of the recently-published EMC-S educational booklet "Experiments and Demonstrations in EMC" was circulated to Board members. Copies will be available at the 1990 Symposium. Clayton also reported that TC-1 has agreed to be part of the EMC-S effort to establish a Field Specific Knowledge Inventory for the IEEE Engineering Skills Assessment Program (formerly the IEEE Academy). This program will be used by EMC-S members to pinpoint any deficiencies requiring correction before an engineer enters the EMC discipline.

5. The Board requested that Dave Hanttula, Chairman of the Distinguished Lecturers Program, report at each Board Meeting on the current results of questionnaires. These questionnaires are filled out by audiences following a "Distinguished Lecturer" presentation. The Board also approved a formula whereby each lecturer may incur authorized expenses of up to $3,000 per year. This provision replaces the previous expenditure arrangement of $750 per lecture, up to a limit of four lectures per year. The expectation is that lecture expenses will average $750, but this new policy allows for flexibility in spending. Higher lodging costs in one area will probably be offset by more modest expenses in another locale. By November, a total of seven lectures had been presented by the six lecturers. It was emphasized that local chapters are encouraged to take advantage of this program and that lectures presented to organizations outside the IEEE can be equally valuable. For more information, call Dave at (415) 656-1661, extension 249.

6. Don also presented the report for Wilf Lauber, Chairman of the Technical Advisory Committee. John Talbot, Chairman of TC-6, Spectrum Management, has resigned; and Wilf has contacted Paul Vaccani as a possible replacement. "The Product Safety Newsletter" was discussed. The Board clarified several points. The members of TC-8 are its chairman, its officers, and various task chairmen -- including the Chairman of their Symposium Paper Review Committee. These persons are the **only** members of TC-8, and they must be EMC-S members. Although "The Product Safety Newsletter" is not an official IEEE publication the TC-8 does have a voice in the *EMC-S NEWSLETTER*, as do the other technical committees.

7. Next Don reported some progress on the organization of the Representative Advisory Committee (RAC), which was formed in 1989 under the supervision of Andy Farrar. Some discussion centered around a letter which Don Clark had received from William R. Tackaberry, Chairman of the Technology Activities Council of the IEEE-USAB. The letter requested confirmation of EMC-S members' continued participation in TAC activities. Don's response indicated that the Society is trying to confirm member interest in further participation. Interested parties should contact Don at (404) 894-4135.

8. Director Bob Hofmann (Member Services) introduced the report of two chairpersons. Charlotte Tyson, who chairs both the EMC-S Awards and Membership Committees, reported that the Society has experienced an eleven percent annual growth rate. This rate is the fourth highest among the IEEE Societies and the highest within Division IV. Fifty-one new members were enrolled in Denver. Dan Hoolihan, Chapter Coordinator, indicated that twenty-two chapters had been represented at the Chapter Chairmen's Breakfast during the Denver Symposium. He also reported that there is now a Paris, France Chapter, chaired by Ferdie Mayer. There is also the possibility for Austrian and Swedish chapters.

9. To encourage chapter participation and input in the Board-level administration of the Society, an expenditure of $5,000 was approved to pay reasonable travel, hotel, and per diem expenses for chapter chairpersons attending the 1990 EMC Symposium. The recipients will be chosen and their allotments determined by Dan Hoolihan. Interested parties should contact Dan at (612) 583-3322.

10. Bob then introduced Jim Mucciolli, who has been appointed chair for the Students Activities Committee. For further information on committee activities, contact Jim at (313) 956-5453.

11. Bill Duff indicated that his committee has forwarded the names of seven strong candidates for fellow. Bud Taggart will continue as Chairman of the Fellow Search Committee. Anyone wishing to suggest a worthy EMC-S member for fellow should contact Bud at (303) 494-7381.

12. Director Walt McKerchar's report on Professional Services was presented by Hugh Denny. Gerry Rothhammer, Public Relations Chairman, indicated in his report that an EMC-S Logo Contest is underway and that the winning design will be selected in time for acknowledgement at the 1990 Symposium.

13. Don Weber's report on Inter-Society Activities centered on a *NEWSLETTER* article on automotive EMC and the European EMC Directive.

14. Herb Mertel, Transnational Committee, submitted a written report indicating that committee scope and objectives have been determined. Twenty-six copies of the *Denver Symposium Record* were mailed to Professor W. Moron, Chairman of 1990 Wroclaw Symposium on EMC. This mailing was part of the EMC-S exchange program. Fifty copies of the *1990 Wroclaw Symposium Record* will be sent to Herb. An announcement on availability of these records will appear in the *NEWSLETTER* later this year.

15. Al Mills, EMC-S PACE Chairman, presented his report. Each month, Al will be sending an article taken from the *PACE IMPACT Newsletter* or other source to the chapter chairmen. In turn, this information can be passed on to the chapter members. Al will also be preparing articles for the *NEWSLETTER*.

16. Bill Johnson, EMC-S Employment Survey Chairman, submitted a written report which indicated that twenty percent of attendees at the Denver Symposium par-

(continued)

ticipated in the last survey. The following data represents a profile of the average respondent:

Age: 44.1 years
Degree: Bachelor of Science
Employment: Fulltime
Salary: $52.9 K
Employer: large company or government
Focus of Activity: local chapter
Credentials: neither registered nor certified

Further details will appear in the *NEWSLETTER*.

17. Bob Brooke, EMC-S Liaison Representative to the Society for the Social Implications of Technology, provided an extensive written report on SSIT activity. Copies may be obtained by calling Bob at (516) 595-3136.

18. Under New Business, President Clark discussed the possibility of buying standard software for conference registration. Hugh Denny indicated that such a purchase would run between $200 and $800 depending on the features included. The Board will take this expenditure under advisement because, in any event, the software could not be in place for the 1990 Symposium. Don Clark then reviewed the 1989 Plan-of-the-Year and suggested that this concept be used as a future management tool. Past President and Division IV Director Len Carlson discussed changes in TAB. Len will detail these changes in an upcoming *NEWSLETTER*. Len then introduced the 1990 slate of officers. There were no nominations from the floor, and the following candidates were elected unanimously.

    President: Ed Bronaugh
    Vice President: Bob Hofmann
    Secretary: Janet O'Neil
    Treasurer: Dick Ford
    Directors:
      Communication Services: Bob Haislmaier
      Member Services: Dan Hoolihan
      Technical Services: Don Heirman
      Professional Services: Walt McKerchar

    Ed Bronaugh was then installed as president, and congratulations were extended to all. Don Clark "passed the gavel" and recounted the significant accomplishments of his officers during the last two years. He thanked each of them, and everyone present rose to extend a heartfelt and much deserved thanks on behalf of the Society. We are grateful to Don for the long, hard, but enjoyable time which Don devoted to the office of president.

19. Outgoing President Clark adjourned the meeting and indicated that the next meeting would be called by President Ed Bronaugh. Secretary Janet O'Neil should be contacted regarding 1990 meeting dates. Janet can be contacted at (213) 870-9383. Ed Bronaugh's numbers are (512) 835-4684 (work phone) and (512) 835-4729 (FAX).

Respectfully submitted, Don Heirman, Associate Editor
Board of Directors Activities

(continued from page 9)

been assigned to head the Quality Assurance Branch at the Naval Air Systems Command -- a position at the same grade level but with a staff six times larger. Dr. Robert Haislmaier, formerly of the Office of Spectrum Management within the Office of the Chief of Naval Operations, has been selected to replace me as the Head of the Electromagnetic Effects Branch. Mr. Richard Ford, an EMC consultant in the Radar Division at the Naval Research Laboratory, and a NARTE-certified engineer and technician, was an original proponent of the certification process as one key part of the three-pronged overall concept loosely termed the "EMC program for excellence." The other two key elements are the determination of certain activities as creditable sources of opinion for select areas of EMC technology and more widespread inclusion of EMI control concepts throughout the acquisition and lifecycle. Mr. Ford serves with Dr. Haislmaier on the EMC-S Board of Directors. Dr. Haislmaier, a fellow of the IEEE and a NARTE-certified engineer, was the action officer at the Pentagon who was responsible for coordinating comments on the requirement for EMC certification and accreditation. He and I are good friends and in the same division at NAVAIR, and we will be able to provide mutual support for full implementation of EMC certification. In summary, the requirement for EMC certification and accreditation is supported by more than one individual, and minor changes in personnel assignments will not weaken the program.

EMC PERSONALITY PROFILE

by William G. Duff

CHARLOTTE TYSON

Charlotte Tyson is a development engineer with IBM in Boulder, CO. She was born and raised in the San Francisco Bay Area; she has lived in Palo Alto and in San Jose, where her parents still reside. She received an AA degree in physics from De Anza College in Cupertino, CA in 1974 and then attended the University of California at Berkeley, where she received a BSEE in 1976. Charlotte concentrated on electromagnetics while pursuing the EE degree and included work in antennas and microwave theory.

Following graduation, Charlotte began working at IBM in Boulder, CO in the General Products Division EMC Lab, where she became the first female EMC engineer at IBM. Early assignments resulted in papers on the performance of ferrite tiles in shielded rooms and on a semi-automated data acquisition system. These papers were presented at the 1977 and 1978 EMC symposia. When her department moved to Tucson in 1978, she transferred to the Office Products Division EMC Lab, where she provided EMC support in the development of copier products. In 1982, Charlotte became the manager of the EMC and Acoustics Department. Her work involved providing testing and engineering support for copier and system printer products and EMC research projects with the National Bureau of Standards (now NIST) and with the University of Colorado. She moved to the Boulder Lab Director's staff in 1987. In the course of that year, she managed the development and release of five product enhancements to the 3820 in addition to providing all field support. In 1988, she took on the responsibility for managing the Project Office for the IBM 3825 Page Printer and then supervised the announcement and shipment of this systems printer during 1989.

Charlotte began her IEEE involvement as the Assistant Treasurer of the IEEE Student Chapter at Berkeley, where one of her duties was counting the money from the IEEE donut machine. She became the Vice President of the Boulder Joint EMC/I&M Chapter in 1980 and then moved on to become Chairman of the Chapter in 1981. She also served as the Registration Chairman at the 1981 IEEE EMC International Symposium in Denver. She continued her service to IEEE by becoming the Region V Chairman of the Women in Engineering Committee during 1982 and 1983. During this period, she also served as the Vice Chairman and then the Chairman of the IEEE Denver Section. She was elected to the EMC Society Board of Directors in 1985 and became the EMC Society Awards and Membership Chairman later that same year. She continues to serve in these positions and has become a "fixture" in the membership booth at EMC symposia!

In addition to her work and IEEE assignments, Charlotte has a full time job at home. She is married to Edward Sejud, who is a lawyer and associate municipal judge. They have two daughters Laura, seven, and Elizabeth, five. The family enjoys both downhill and cross-country skiing and hiking. This year they have spent considerable time on landscaping and other projects for the new home where they moved this past summer. When she is not making Halloween costumes, taking kids to swimming lessons, or organizing birthday parties, Charlotte is involved in her children's schools through the Parent Teacher Organization and the Science Fair Committee. She is a life member of the Society of Women Engineers and is listed in *Who's Who in American Women* and *Who's Who of Emerging Leaders in America*.

Although her job assignments have taken her away from specializing exclusively in EMC, her background in electromagnetics continues to be an important factor in printer and systems development. Through her work in the EMC Society, she hopes to keep current with EMC developments and to be a proponent of good EMC design within development groups.

CHAPTER CHATTER

by Charles F. W. Anderson

CENTRAL NEW ENGLAND

This Chapter held their first meeting of the 1989-90 season on October 18 at the Chomerics facility in Woburn. Dan Hoolihan of Amador spoke on the topic "The EMC Directive of the EEC." Dan pointed out that in 1992 the EEC will have a common set of EMI rules and regulations. He discussed details of the EMC Directive as they will apply to all electrical/electronic equipment. There were twenty-nine attendees, including twenty IEEE members and nine guests.

The December meeting featured V. Kajunski of the New England FCC Field Office. His topic was recent revisions of Part 15. Joe Butler of Chomerics, Central New England Secretary/Treasurer, has been elected to the EMC-S Board of Directors. [Thanks to John Clarke for the input.]

NEW JERSEY COAST

Autumn brought numerous activities to report! On September 25, a combined EMC/VT/AP and Communications Chapters Meeting hosted Seymour Krevesky of C^3I Systems Group, Inc. His topic was "Solar Cycle 22 Status and Its Impact on Terrestrial and Satellite Systems." He discussed the March 1989 power grid failures believed to have been caused by the high solar flux values and flares. Seymour reviewed both historical and recent solar-cycle events and presented information on new prediction techniques. After a long career at Ft. Monmouth, Seymour is now principal engineer at C^3I Systems, which provides support functions to the Army CECOM RD&E Center. He is secretary of the joint Aerospace and Electronic Systems/Engineering Management Chapter of the New Jersey Coast Section.

An October 19 luncheon meeting of the EMC/VT/AP Chapter featured Dr. Randy Giles of AT&T Bell Labs. His topic was "Active Fiber Optic Amplifiers." Special attention was focused on amplification achieved in erbium-doped fibers. Dr. Felix Schwering spoke at a joint meeting held with MTT/ED/LEO on November 14. Dr. Schwering is a visiting professor at Rutgers University and at the New Jersey Institute of Technology; he has had a long, distinguished career on both sides of the Atlantic. His topic was "Millimeter-Wave Propagation in Vegetation." Results of extensive tests at 9.6, 28.8, and 57.6 GHz were presented. The data were used as the basis for development of a theory of mm-wave propagation in foliage, which combines the coherent (direct-path) component with the incoherent (multiply-scattered) components. Further testing, directed towards refinement of the theory, is currently in progress.

December 19 marked the much-heralded annual Christmas party. This year sponsorship included EMC/VT/AP, MTT/ED/LEO and AES/EM Chapters! It sounds like a wonderful interdisciplinary get-together, and your column editor wishes he could have been there. [Thanks to Seymour Krevesky and Gene Barber for the inputs.]

SANTA CLARA VALLEY

This Chapter's October 10 meeting was addressed by Franz Gisin of ROLM Systems. His topic was "Designing RF-Anechoic Chambers" and covered the correlation of RF enclosures to open-field ranges, discussion of chamber geometries and absorber-lining material properties, and the emphasis on chamber optimization through proper selection of parameters.

On November 8, the Chapter met at Tandem Computers in Cupertino for a tour of that company's new 10-meter anechoic chamber, which simulates open-site test areas and which is to be used for testing large computer systems to FCC, VDE, and CISPR requirements. It has a 5.5m turntable and a 2.4m thick absorber material lining. Gherry Petitt, the Chapter Chairman, was both host and speaker.

The Chapter decided to forego a December meeting, but meets on January 9 to hear Dr. Scott Bennett of Hewlett Packard speak on "Neglected Aspects of Radiated Emissions Measurements." [Next time please sign chapter information so proper credit can be given.]

TWIN CITIES

On October 10 Don Heirman addressed the Chapter meeting and covered "The Push towards Emission Limits and Test Technique International Harmonization." Don's presentation was given order under the auspices of the Distinguished Lecturer Program. On November 21, Bill Kimmel of Kimmel Gerke & Associates spoke on "VHF Radio Interference to Microprocessors." [Thanks to Dan Hoolihan for the information.]

WASHINGTON/NORTHERN VIRGINIA

This Chapter's September 21 meeting heard Carl Herzog of Electro-Metrics, who discussed the differences between spectrum analyzers and EMI receivers when taking interference measurements. He touched on overload, bandwidths, and

spurious responses. He concluded that EMI receivers give better overall results.

The November 30 meeting featured Marty Bryant, Technical Director of NAVSEA's EMENG Program. He emphasized that the program exerts influence on the design of surface craft with the goal of minimizing degradation of combat effectiveness caused by adverse electromagnetic effects. This long term program will extend at least through 1994. Ship topside environment is being given top priority. Marty discussed the programmatics and organizational structures established to implement the EMENG concept.

Your column editor was able to attend both meetings, which were held at the Holiday Inn/National Airport -- just a short walk from Crystal City Metro Station. Any EMCS member who happens to be in Washington near the end of an odd-numbered month should call Jackie Hunter at (703) 321-7301. A meeting always means a good crowd and fine food and drink.

PERSONAL NOTE

I'll be helping Jack Kelleher with the publications aspects of the upcoming 1990 Symposium. If you're one of the *paper-givers*, we'll probably be in touch.

EDUCATION COMMITTEE NEWS

by Clayton Paul

New officers of the EMCS Education Committee were selected at the Denver symposium. These are Clayton Paul (University of Kentucky) as chairman, Jack Williams (IBM, Raleigh) as vice chairman, and Kimball Williams (Eaton Corporation) as secretary. They have been assured that their terms will run for only two years.

An article written by Clayton Paul entitled "Establishment of a University Course in Electromagnetic Compatibility (EMC)" appeared in the November issue of the *IEEE Transactions on Education*. This is a special issue on "Teaching Electromagnetics" organized by Bob McIntosh of the University of Massachusetts.

The "EMC Experiments Booklet" has been printed. An initial printing of 250 copies spiral-bound will be available at the Washington symposium. Currently the booklet contains five experiments which demonstrate various aspects of EMC. These are "Crosstalk in Cables" (Clayton Paul), "Electrostatic Discharge" (Tony Nasuta), "Ground Noise in Digital Logic" (Henry Ott), "Rusty Bolt Demonstrator" (Raymond F. Elsner), and "Noise Measurement by Induction" (Douglas C. Smith). The intent of this booklet is to facilitate the incorporation of EMC into university laboratory and lecture courses and also to provide a mechanism for increasing awareness of EMC and some of its facets outside the university setting. The EMC Education Committee will assist further in the establishment of EMC courses in undergraduate electrical engineering programs by providing recommended course outlines, reference material, and lists of representative textbooks to interested faculty. Publication of this document has been more difficult then we had imagined. The primary problem has been the lack of submission of experiments by the members of EMCS. We desperately need more experiments to be submitted for future inclusion if this booklet is to achieve its objectives. Anyone who has an experiment in mind which he would like to see included should submit that experiment to Clayton Paul, Department of Electrical Engineering, University of Kentucky, Lexington, KY 40506. In order to relieve us of some of the details of preparation, we are asking that the experiment be submitted according to a format which is detailed at the beginning of the present booklet. We will have the experiment retyped in the font style of the other experiments, and the contributor will be acknowledged at the beginning of the booklet. We want to update this booklet; the 1990 version is not the final edition. Please help us by submitting experiments.

The Distinguished Lecturer Program is proceeding smoothly thanks to the diligent work of Program Chairman Dave Hanttula. The current lecturers, along with their term expiration dates, are Herb Mertel (12/89), Roger Southwick (12/89), Scott Bennett (6/90), Don Heirman (6/90), Ed Bronaugh (6/91), and Joe Fischer (6/91). Seven lectures were given in 1989. Anyone interested in having a Distinguished Lecturer speak at a chapter meeting or other gathering should contact the lecturers through Dave at Grid Systems, Freemont, CA, (415) 656-1661, extension 249. Take advantage of this opportunity to have these distinguished gentlemen revive your meetings.

Kimball Williams is converting the EMC Bibliography to ASCII format for incorporation on diskettes. This is intended to be a compact and localized source of reading material germane to the subject of EMC.

Clayton Paul attended an IEEE meeting concerning the establishment of the Engineering Skills Assessment Program (ESAP). This was previously called the IEEE Academy. The intent is to assist those who wish to change fields (such as from microwaves design to safety) to allow them to assess their deficiencies, and to help them in remedial work. The program consists of a Field Specific Knowledge Inventory (FSKI), which is a complete list of specifics which an engineer in that job function would be expected to know and perform. There is also a Professional Self-Assessment Evaluation (PSAE) which is a test that the person would take (in the privacy of his/her home). We are currently determining whether there is any interest in the EMC TACs in assisting in the preparation of these items.

PRODUCT SAFETY

by John McBain

CALL FOR PAPERS

The latest development for the Product Safety Technical Committee is the rush to organize a session at 1990 IEEE International Symposium on Electromagnetic Compatibility. "A Call for Papers" went out in the November/December issue of the "The Product Safety Newsletter." By now, I would expect that the authors of selected papers are looking ahead toward the March 1 deadline for camera-ready copy.

Anyone who missed the submittal date, but who has a paper on a product safety topic, should consider the following possibilities:

- Call John Knecht, PSTC Symposium Liaison Chairperson, today. Perhaps a replacement paper will be needed; it has been known to happen! Or perhaps the paper could be presented at one of the local symposiums being sponsored by one of the chapters.

- Get in touch with Roger Volgstadt, editor of "The Product Safety Newsletter" by phoning (408) 285-2540 or sending a FAX (408) 285-0505. Roger is always on the lookout for articles, and the initial results of the "PSN" Reader Survey indicated a decided preference for technical articles.

- Contact a local PSTC group and offer to address one of the monthly meetings. Phone me at (408) 447-0738. I can provide the name of the local contact and add interested parties to the "PSN" mailing list at the same time. Those already receiving "The Product Safety Newsletter" should look in the "Calendar" or in the "Area Activity Reports" for local contacts.

To recapitulate the PSTC Call for Papers, original, unpublished papers are being sought on all aspects of providing protection from electric shock in the design of electrical and electronic products. Possible topics would include, but are not limited to, the following: grounding, double and reinforced insulation, shielding, ground fault circuit interrupter (GFCI), Polarization, and Immersion Detection Circuit Interrupter (IDCI).

Papers on these topics will be incorporated into a program which will provide a brief overview defining each topic and describing the advantages of each method. Papers should include any connection or conflict between the electric shock protection means and the EMC control methods -- *e.g.* leakage current or grounding points. The scheduled session is titled "Electric Shock - Means of Providing Protection in the Design of Electric Products."

CONTACT

Correspondence regarding papers should be directed to:

John Knecht
Underwriters Laboratories, Inc.
33 N. Pfingsten Road
Northbrook, IL 60062
Telephone: (708) 272-8800
FAX: (708) 272-8129

"THE PRODUCT SAFETY NEWSLETTER"

Those who wish to continue receiving "The Product Safety Newsletter" in 1990 must return the page entitled "Subscription Renewal Form and Reader Survey." One was attached to the front of the last two issues of 1989. Thanks!

1989 EMC EMPLOYMENT SURVEY

by Bill Johnson

During the 1989 IEEE EMC Symposium in Denver, an employment analysis survey was conducted. It is always interesting to compare ourselves with others in the field and useful to identify those whom we are reaching with the symposium. While we might be tempted to consider these results as indicative of the entire community, it should be reiterated that only symposium attendees were surveyed. There was, however, a significant sample measured (approximately 20 percent of the full-time attendees).

This year the average survey respondent was 44.1 years of age, had earned a bachelor's degree, was employed full-time in the EMC field, had 17.5 years of professional experience, and earned $52,900 per year. He (or she) works for either a large company or the government, is active in a local EMC chapter, and is presently not registered or certified.

These surveys are interesting, but they can also be useful to the engineer considering a change. What would it be worth to return to school to complete a degree or to obtain an advanced degree? Also it is important to note that the peak earning years occur between 11 and 20 years of experience.

The survey showed that 60 percent of the PhD's were making over $60,000/year while only 42.5 percent of those with master's degrees and 23 percent of those with bachelor degrees earned that much. Another interesting fact was the relationship between company size and salary. In company's with less than 100 employees only 22 percent of the respondents earned over $60,000, but in companies with over 5,000 employees over 35 percent earned that much.

The comparison of salary and years of service was interesting in that after 20 years of service, the number of persons in the top salary bracket declined.

Years Experience	0-5	6-10	11-20	20-25
Salary				
Under $30K/year	20	10		
$30-40K/year	55	11	4	6
$40-50K/year	25	37	26	6
$50-60K/year		26	27	63
$60+/year		16	43	25

Many engineers seem to feel that NARTE certification has an advantage. Almost 50 percent of those in full-time EMC work indicated that they will seek certification. Laboratory accreditation did not appear as popular with only 30 percent indicating that they would seek accreditation. It will be interesting to follow these answers in the future.

As usual, engineers are optimistic with over 50 percent anticipating an increase in employment within a year while only 10 percent feel a reduction in employment is coming.

The following data compare 1989 data with that of previous years. The small sample size of 1987 probably distorted the results.

ALL DATA IS IN PERCENT OF RESPONDENTS

QUESTION	1983	1986	1987	1989
Membership Grade				
Associate	0	2	27	8
Member	46	49	32	54
Senior Member	11	14	15	8
Fellow	5	3	2	3.5
Not a Member	38	32	24	26.5
Age				
20-30	14	16	14.5	13.1
30-40	22	25	19	21
40-50	34	30	22.5	36.2
50-60	24	18	35	21
60 and Over	6	11	12	8.7
Highest Earned Degree				
None	6	11	2.5	7.2
Associate	8	4	2.5	3.6
Bachelor	40	47	47.5	54
Prof. Degree	4	2	10	2
Master	25	25	25	22.5
Doctorate	9	11	12.5	11
Employment Status				
F/T EMC Area	60	76	62.5	73
F/T Other Area	17	7	12.5	7.2
P/T EMC	21	11	20	16
Inv. Unempl.	0	0	0	0
Vol. Unempl.	0	3	0	0
Ret./Not Avail.	0	0	0	0
Ret./Avail.	1	1	2.5	1.9
Self Employed	1	2	2.5	1.9

(continued)

Registration/Organization Representation				
Registered P.E.	22	19	22.5	20
Engr. in Trng.	9	14	7.5	8
Cert. Engrg. Technician	1	2	2.5	1.5
Member Prof. Barg. Unit	1	2	2.5	0.75
None	67	63	65	68
Years Professional Experience				
0-5	11.4	11	15	14.5
6-10	13	18	12.5	14
11-20	33	26	10	30.5
21-25	17	14	15	11.6
Over 25	26	31	47.5	29.7
Percent Annual Base Salary				
Under $30K	14	9	15	6
$30-40K	26	22	12.5	13
$40-50K	36	24	27.5	21
$50-60K	17	24	20	30
Over $60K	7	21	25	30
Number of Employees in Your Company or Institution				
1-99	9	13	20	16.7
100-499	15	16	12.5	13.8
500-4999	35	23	30	24
5000 up	41	48	37.5	49
Number of EMC Employees in Your Place of Work				
1-4	46	51	50	46
5-9	22	23	30	20
10 and Over	32	26	20	34
Which of the Following are Useful to You				
Symposiums (U.S.)	35	35	40	96
Symposiums (Abroad)	5	5	20	4
Transactions	28	24	16	58
NEWSLETTER	24	24	24	46

IRAs

Engineers and scientists are being urged by IEEE United States Activities and the Engineers and Scientists Joint Committee on Pensions (ESJCP) to communicate their support for legislation to expand the availability of tax-favored Individual Retirement Accounts to their U.S. Senators and Representatives. Support is needed for legislation that would increase individual savings for retirement and reduce capital cost for productive investment in the nation's economy.

Individual Retirement Accounts are important because personal savings are a significant supplement to Social Security and employer-provided pensions as a source of retirement income for working Americans. Private savings also provide a major source of investment capital needed to increase industrial productivity and to sustain economic growth. IEEE-USA and ESJCP recommend that Congress promptly fashion a compromise on IRAs that will restore the full deduction for individuals and consequently will increase personal savings and simulate investments.

Concerned engineers and scientists should call, write, or visit their Senators and Representatives at once. Calls should be directed to the Capitol Hill Switchboard at (202) 224-3121. Letters or telegrams to Senators should be addressed to the United States Senate, Washington, DC 20510; to House Members, U.S. House of Representatives, Washington, DC 20515. Urge your Senators and Representatives to support tax-favored IRAs.

[Source: IEEE USA Hotlines]

AN EMC METROLOGY LAB FOR THE USSR

In the Wake of Glasnost and Perestroika

Gosstandart/Viinims in Moscow has announced that they are proceeding with an electromagnetic effects metrology laboratory. The United States Department of Commerce has approved the award of a contract for engineering design, instrumentation, installation, construction, consulting, and training to Hamilton Engineering, Inc. (HEI) of Seattle, WA.

This EMC test facility will allow the USSR to test to recognized international standards such as FCC, VDE, ISO, SAE, IEEE, EIA, CISPR, and IEC. Calibration will be traceable to the National Institute of Standards and Technology (formerly the NBS) and to other standards laboratories.

Project Manager for the Hamilton team is Chris Johnson, an HEI vice president. Overall technical direction will be provided by Don Weber, President of HEI, and metrological systems engineering will be the responsibility of Harold (Bud) Taggart. Walt McKerchar will act as international liaison and will assist Gosstandart in becoming a working member of the EMC community. It is projected that the laboratory will be completed and "on-line" in 1993.

EMCABS

by William H. McGinnis

In this issue we continue publishing abstracts of papers from previous EMC Symposia, other conferences, meetings and publications. The EMCABS committee is composed of the members listed below. By way of introduction to the community, they are listed with their company affiliations:

Mike Crawford, National Bureau of Standards
Bob Hunter, Texas Instruments
R. M. Showers, University of Pennsylvania
Tasuku Kakagi, Tohoku University, Japan
Daniel Kenneally, Rome Air Development Center
Diethard Hansen, Asea Brown-Boveri, Switzerland

"HOW CAN I GET A COPY OF AN ABSTRACTED ARTICLE?" The answer to this frequently asked question follows:

Most large public libraries, some small public libraries, all engineering school libraries and most other college or university libraries have copies of publications in which articles appear. If they happen not to have the desired publication, such libraries usually can obtain it or a copy of the article from other libraries or sources. Many company libraries, both large and small, also have such arrangements. Many articles are available from the National Technical Information Service (NTIS) and/or the Defense Technical Information Center (DTIC). To retrieve an article or publication containing an article abstracted in EMCABS, it is suggested that you contact your company library, a nearby engineering school library, a university library, or your municipal public library. If the library does not have the publication, go to the librarian, explain what you need and he or she will help you get the publication on loan, perhaps from another library or, for a nominal charge, from NTIS. If you have a Department of Defense contract, the contracting officer or your company librarian can help you get publications from DTIC. The information needed is contained in the EMC abstract heading.

EMCABS: 01-01-90

Radiation Properties of a Spherical Dipole Antenna

K. Murakawa, N. Kuwabara, and F. Amemiya
NTT Telephone and Telegraph Corp., Tokyo, Japan

1989 International Symposium on Electromagnetic Compatibility Proceedings
Sept. 8-10, 1989, Vol. 2, pp. 572-576

ABSTRACT: A new antenna, with radiation properties which can be calculated by numerical analysis, is proposed. The antenna uses an optical-electrical converter acting as an oscillator; and optical fiber is used as a signal transmission line. The radiation properties are analyzed by the mode matching method, and the radiated electric field is measured to check the numerical-calculation accuracy. It is found that the calculated radiation properties of a spherical dipole antenna show good agreement with the measured properties and that the antenna is superior in that it has no metal cable, it is small in size, and it has little electric coupling with surrounding obstacles.

INDEX TERMS: Antennas, Test Methodology, Open Field Site Measurements

EMCABS: 02-01-90

Near Field Effect in the Evaluation of Site Attenuation

Hoing-Dow Chuang and Chi-Fang Huang
Dept. of Electrical Engineering, Tatutung Institute of Technology, Taipei, Taiwan

1989 International Symposium on Electromagnetic Compatibility Proceedings
Sept. 8-10, Vol. 1, pp. 10-15

ABSTRACT: This paper provides a useful method for calculating theoretical site attenuation of a standard site. The technique takes advantage of an assumption of sinusoidal current distribution on the half-wave dipole antenna for exact field. The geometrical optics (GO) theory for ground plane reflection is useful to derive a site attenuation model in terms of antenna factors of both transmitting and receiving antennas. Therefore, the near field and mutual coupling problems can be solved easily. The current distribution assumed by this method may be less accurate than that obtained by using Moment Method (MM), but it really provides a more efficient numerical solution, *i.e.,* the data obtained agree with measured data while considerable calculating time is saved.

INDEX TERMS: Near Field, Site Attenuation, Antenna Factor, Geometrical Optics

Correction Factors for the Normalized Site Attenuation

EMCABS: 03-01-90

Akira Sugiura and Masuo Okamura
Communication Research Lab, MPT and JMI, Tokyo, Japan
1989 International Symposium on Electromagnetic Compatibility Proceedings
Sept. 8-10, 1989, Vol. 1, pp. 29-34

ABSTRACT: Recently testers have been required to validate an EMI test site by measuring the Normalized Site Attenuation (NSA), essentially the transmission loss between two antennas placed at the test site. Investigations have, therefore, been carried out on the formulation of the NSA in terms of the self- and mutual-impedances between the antennas. As a result, it has been found that the original concept of the NSA is not applicable to the measurement using dipole antennas and that the correction factors proposed in the standard are not appropriate. In addition, numerical studies have been made by the method of measurements using dipoles. Results are obtained for antenna factors calibrated at various antenna heights above the metal ground plane.
INDEX TERMS: Site Attenuation, Antenna Factors

A New Criterion on Electrostatic Discharge

EMCABS: 04-01-90

Chang-Yu Wu, Howard H. Nick, and Brock E. Osborn
IBM, Poughkeepsie, NY
1989 International Symposium on Electromagnetic Compatibility Proceedings
Sept. 8-10, 1989, Vol. 1, pp. 80-82

ABSTRACT: In recent years, electrostatic discharge (ESD) has become one of the major subjects which often concerns the electromagnetic compatibility (EMC) community. In this paper, a new ESD testing criterion is defined, and a new ESD process is described which, when properly implemented, will lead to a more flexible and complete ESD testing methodology.
INDEX TERMS: ESD, Testing Methodology

A Broadband Alternative EMC Test Chamber Based on a TEM Cell-Anechoic Chamber Hybrid

EMCABS: 05-01-90

D. Hansen, P. Wilson, D. Koenigstein, and H. Schaer
Asea Brown-Boveri, Ltd., Baden, Switzerland
1989 International Symposium on Electromagnetic Compatibility Proceedings
Sept. 8-10, 1989, Vol. 1, pp. 133-137

ABSTRACT: The use of a TEM cell-anechoic chamber hybrid EMC test chamber is discussed. This hybrid chamber may be used for both susceptibility and radiated emission testing, CW or pulse source, for frequencies from dc to above 1 GHz. The TEM mode is used to simulate an incident plane wave for susceptibility testing. Radiated emission data obtained in the hybrid chamber may be used to simulate ground screen measurements. Advantages and limitations to this new approach are discussed. The emphasis is on measurement applications, and a variety of representative data are shown.
INDEX TERMS: Testing Methodology, TEM Cell, Absorber, Anechoic Chamber

A Microstrip Patch Antenna as a Standard Transmitting and Receiving Antenna

EMCABS: 06-01-90

Motohisa Kanda
NIST, Boulder, CO
1989 International Symposium on Electromagnetic Compatibility Proceedings
Sept. 8-10, 1989, Vol. 1, pp. 460-462

ABSTRACT: The possibility of employing a microstrip patch antenna as a standard transmitting and receiving antenna is discussed. The intrinsic properties of the substrate used for the antenna are determined by careful impedance measurements. The experimental results indicate that the transmitting characteristics of a microstrip antenna can be determined theoretically from its geometry. The microstrip patch antenna discussed here is physically small (20 cm square for 450 MHz) and can be well matched to a power delivery system (SWR = 1.17).
INDEX TERMS: Antennas, Testing Methodology, Microstrip, Anechoic Chamber

Controlling Interface Stress in Bulk Current Injection EMP Testing

EMCABS: 07-01-90

Alexander F. Rivera
Hughes Aircraft Company, Culver City, CA
1989 International Symposium on Electromagnetic Compatibility Proceedings
Sept. 8-10, 1989, Vol. 2, 676-683

ABSTRACT: Current injection is a common but poorly defined form of EMP and EMI overstressing interfaces. This paper presents theoretical and experimental data on levels which may occur during this form of testing and explains how they differ from simpler estimates using transfer impedance data and disregarding transmission line effects. Additionally, a technique is provided for calculating the power delivered to interface lines. Guidelines are provided to avoid the pitfalls encountered in testing.
INDEX TERMS: EMP, Testing Methodology, Bulk Current Injection, Shielding Effectiveness

EM Exposure of a Human Head to the Near Fields of Portable Radio Transmitters

EMCABS: 08-01-90

Y. Kamimura, Y. Yamanaka, and M. Kotaki
Ministry of Posts and Telecommunications, Tokyo, Japan
1989 International Symposium on Electromagnetic Compatibility Proceedings
Sept. 8-10, 1989, Vol. 2, pp. 735-740

ABSTRACT: In order to estimate the radiation hazards posed by portable radio transmitters, measurements were conducted on the distribution of the electromagnetic (EM) field near transmitters and on the impedance variations of their transmitting antennas in the presence of an operator. As a result of these measurements, theoretical and experimental evaluations were carried out on the RF energy deposition in a human head.
INDEX TERMS: Radiation Hazards, Test Methodology

Improvements of the Characteristics of EM Compatibility of a Ship's Radio Communication Equipment with the Optimization of Antenna Arrangement

EMCABS: 09-01-90

Dr. Kostas K. Venskauskas
Central Marine R and D Institute, Leningrad, USSR
1989 International Symposium on Electromagnetic Compatibility Proceedings
Sept. 8-10, 1989, Vol. 2, pp. 765-770

ABSTRACT: An approach to optimization of the arrangement of antennas and topside design on ships based on use of the moment method is proposed. Particular recommendations on the actual arrangement of antennas and topside design are presented in table form. Computer-aided techniques and the results of measurements on ships have been utilized extensively.
INDEX TERMS: Antennas, Test Methodology

Newly-Developed, Non-Woven Fabric EM Wave Absorber

EMCABS: 10-01-90

T. Inui, S. Yoshiuchi, T. Harada, and K. Hatekeyama
NEC Corp., Tokyo, Japan
1989 International Symposium on Electromagnetic Compatibility Proceedings
Sept. 8-10, 1989, Vol. 2, pp. 775-779

ABSTRACT: Non-woven fabrics, composed of both stainless steel and polyester fibers, were used to create a new EM-wave absorber which is both thin and light weight. It operates at ultra-broad frequency band. Typical absorption characteristics are approximately 20 dB for the 3 to 40 GHz frequency range with 23 mm total thickness and 1300 gr/m^2.
INDEX TERMS: EM Absorber

The Ceramic Absorber to Protect Electronic Devices from Electromagnetic Interference

EMCABS: 11-01-90

T. Yamazaki, T. Saburi, T. Sakurai, and M. Asano
Kariya City, Japan
1989 International Symposium on Electromagnetic Compatibility Proceedings
Sept. 8-10, 1989, Vol. 2, pp. 798-802

ABSTRACT: This report concerns the development of the Ceramic Absorber to protect electronic devices from electromagnetic interference. The high-performance EMI filter provides highly-integrated transmission lines with an electromagnetic absorption effect, based on a ceramic plate. The optimized design of ceramic material, making full use of dielectric losses is presented. The superiority of these filters in achieving EMI suppression in automotive electronic devices is verified by irradiation tests.
INDEX TERMS: EM Absorber, Automotive Electronics, EMI Filters

Transmission Characteristics of Nonlinear EMC Protection Circuits Consisting of Filter-Pin Connectors

EMCABS: 12-01-90

J. L. ter Haseborg,[1] K. D. Kruse,[1] F. Wolf,[2] and C. Plath[2]
Technical University of Hamburg,[1] Hamburg, West Germany
Company for Nautical Electronics,[2] Hamburg, West Germany
1989 International Symposium on Electromagnetic Compatibility Proceedings
Sept. 8-10, 1989, Vol. 2, pp. 815-819

ABSTRACT: In order to provide a protection against transients (EMI), nonlinear protection circuits are necessary. Special multistage protection circuits with nonlinear filter-pin connectors (FPC) have been developed for the protection of control and data lines. This paper deals with the transmission characteristics of protection circuits consisting of nonlinear conventional elements, as well as of nonlinear filter-pin connectors.
INDEX TERMS: EMI Filters, Filter Pins

Porpoising Coupling in Braided Cables

EMCABS: 13-01-90

L. Hoeft,[1] J. Hofstra,[1] and R. J. Peel[2]
BDM International, Albuquerque, NM[1]
Martin Marietta Aerospace, Denver, CO[2]
1989 International Symposium on Electromagnetic Compatibility Proceedings
Sept. 8-10, 1989, Vol. 2, pp. 595-599

ABSTRACT: The magnitude and phase of a set of cable samples, chosen to provide examples of both aperture and porpoising coupling, were measured in a quadraxial test fixture. These measurements showed that the phase of the transfer impedance at high frequencies for aperture coupling was opposite to that from nonaperture coupling. In addition, the magnitude decreased when the contributions were about equal. These measurements demonstrate that nonaperture coupling exists and that it is as important as aperture coupling. These measurements also indicate how the use of braided cables can be optimized.
INDEX TERMS: Shielding Effectiveness, Transfer Impedance

Measurement of the Shielding Effectiveness by Applying Divided TEM Cells

EMCABS: 14-01-90

Nobuo Murota
Industrial Research Institute, Aichi-Ken, Japan
1989 International Symposium on Electromagnetic Compatibility Proceedings
Sept. 8-10, Vol. 2, pp. 706-709

ABSTRACT: A new test fixture for the measurement of the electromagnetic shielding effectiveness at the far field region has been developed. The fixture has the construction of the TEM cell divided into two parts and a movable inner conductor. The advantages of this fixture include the convenience of making the test piece and the reliability of measurement. The difference in measured values between some fixtures (ASTM and the Advantest method) is also described.
INDEX TERMS: Testing Methodology, TEM Cell, Shielding Effectiveness

EMC SOCIETY DIRECTORS

SOCIETY OFFICERS	1990
President	E. L. Bronaugh
Vice-President	H. R. Hofmann
Secretary	J. N. O'Neil
Treasurer	R. T. Ford

FUTURE EMC SYMPOSIA	CHAIRMAN
1990 - Wash, DC, Aug 21-23	T. W. Doeppner
1991 - Cherry Hill, NJ, Aug 13-15	D. N. Heirman
1992 - Los Angeles, CA, Aug 18-20	T. Cantine
1993 - Dallas, TX, August	E. N. Vance
1994 - Chicago, August	H. R. Hofmann

DIRECTORS AT LARGE

Term Expires End of 1990	Term Expires End of 1991	Term Expires End of 1992
E.L. Bronaugh	D.E. Clark	J.E. Butler
C.R. Tyson	R.T. Ford	P.L. Coles
R.J. Haislmaier	H.R. Hofmann	W.A. Kesselman
D.N. Heirman	D.D. Hoolihan	W.D. McKerchar
E.D. Knowles	A.H. Mills	D.M. Staggs
H.K. Mertel	C.L. Smith	D.A. Weber

EX OFFICIO (With Vote)
Immediate Past Pres
D. E. Clark

EX OFFICIO (Without Vote)
Chapter Chairmen
Standing Com Chairmen
E. Herz, IEEE HQ
I. Engelson, IEEE HQ
L. Carlson, Div 4

COMMUNICATION SERVICES — **DIRECTOR: R. J. Haislmaier**

Committees:	CHAIRMEN:
Newsletter Editor	R. D. Goldblum
Symposia/Conferences	W. E. Cory
Transactions Editor	M. Kanda
History	C. L. Smith

MEMBER SERVICES — **DIRECTOR: D. D. Hoolihan**

Committees:	CHAIRMEN:
Awards	C. R. Tyson
Chapter Publicity	C. F. W. Anderson
Chapter Coordinator	D. D. Hoolihan
Membership	C. R. Tyson
Fellows Evaluation	W. G. Duff
Fellows Search	H. E. Taggert
Constitution and Bylaws	B. L. Carlson
Nominations	B. L. Carlson
Student Activities	J. P. Mucciolli

TECHNICAL SERVICES — **DIRECTOR: D. N. Heirman**

Committees:	CHAIRMEN:
Education	C. R. Paul, Jr
Distinguished Lecturer Program	D. N. Hanttula
Standards	D. N. Heirman
Technical Advisory Committee	W. R. Lauber
Electromagnetic Compatibility Management-TC1	R. V. Carstensen
Electromagnetic Compatibility Measurement-TC2	D. N. Heirman
Electromagnetic Environment-TC3	A. A. Smith, Jr.
Electromagnetic Interference Control-TC4	J. C. Parker, Jr.
Electromagnetic Pulse-TC5	E. F. Vance
Spectrum Management-TC6	Vacant
Sequency Union-TC7	H. F. Harmuth
Electromagnetic Product Safety-TC8	R. Pescatore
Representative Advisory Committee	A. Farrar
Committee on Man and Radiation (COMAR)	D. D. Hoolihan
Energy Committee	Vacant
Research & Development	W. W. Everett, Jr.
New Standards Committee	D. N. Heirman
U.S. National Committee of U.R.S.I.	E. N. Skomal
Intnl Consultative Radio Comm. (CCIR) U.S. Study Grp 1	Vacant
CISPR Subcomm. A & G (US Ntl Comm. of IEC TAG)	W. S. Lambdin
IEEE Representatives to ANSI-ASC C63	E. L. Bronaugh
	D. N. Heirman
IEEE Representative to CBEMA	H. R. Hofmann

PROFESSIONAL SERVICES — **DIRECTOR: W. D. McKerchar**
ASST. DIRECTOR: G. P. Rothhammer

Committees:	CHAIRMEN:
Employment Analysis	W. F. Johnson
Intersociety Relations	D. A. Weber
Public Relations	G. P. Rothhammer
Transnational Committee	H. K. Mertel
PACE Coordinator	A. H. Mills
Society on Social Implications of Technology	R. H. Brook

DISTINGUISHED LECTURERS

W. S. Bennett
E. L. Bronaugh
J. F. Fischer
D. N. Heirman
H. K. Mertel
R. A. Southwick

Please send all corrections and changes to H. R. Hofmann.

November 15, 1989

CALENDAR
1990

March 19-23	6th Annual Review of Progress in Computational Electromagnetics The Naval Postgraduate School Monterey, CA Contact: Richard W. Adler Naval Postgraduate School Code 62AB Monterey, CA 93943 Telephone: (408) 646-2352
March 21-23	40th Electronics Components and Technology Conference The Bally's Hotel Las Vegas, NV Contact: Susan Schlough AT&T Bell Labs Room 1A-224 260 Cherry Hill Road Parsipanny, NJ 07054 Telephone: (201) 229-3291
May 7-9	40th IEEE Vehicular Technology Conference Crowne Plaza - Holiday Inn Orlando, FL Contact: IEEE VTC '90 P.O. Box 860130 Plano, TX 75086 Telephone: (214) 952-3772
May 28-June 1	1990 Nuclear EMP Meeting (NEM '90) University of Mexico Albuquerque, NM Contact: C. W. Jones NEM '90 Technical Program Committee Metatech Corporation 2309 Renard Place, SE, Suite 401 Albuquerque, NM 87106
June 26-29	10th International Wroclaw Symposium on Electromagnetic Compatibility The Technical University Wroclaw, Poland Contact: Mr. W. Moron EMC Symposium Box 2141 Wroclaw 12, Poland Telephone: 48-42-41
August 21-23	IEEE International Symposium on Electromagnetic Compatibility The Washington Hilton Washington, DC Contact: IEEE EMC International Symposium on Electromagnetic Compatibility P.O. Box 19342 Washington, DC 20036

INSTITUTIONAL LISTINGS

The IEEE Electromagnetic Compatibility is grateful for the assistance given by the firms listed below and invites application for Institutional Listings from other firms interested in the electromagnetic compatibility field.

AMPLIFIER RESEARCH, 160 School House Road, Souderton, PA 18964-9990
Telephone: (215) 723-8181, TWX: 510-661-6094, FAX: (215) 723-5688
Broadband RF power amplifiers, 1 W to 10 kW, 10 kHz to 1 GHz; RFI test accessories and antennas; EMP simulators.

ARK ELECTRONICS CORPORATION, 1325 Industrial Highway, Southhampton, PA 18966
Telephone: (215) 322-6510, FAX: (215) 322-4231
RF shielded enclosures, custom-manufactured shielded doors, RF filters, waveguide air vents, EMI laboratory testing, EMC consulting; a complete EMC capability.

CHOMERICS, INC., 77 Dragon Court, Woburn, MA 01888-4014
Telephone: (617) 935-4850
EMI/EMP shielding materials, gaskets, conductive compounds, shielded windows, vents and filters, cable shielding, FCC and TEMPEST Testing, application engineering, shielding tapes and laminates.

COMPLIANCE ENGINEERING, 271 Great Road, Acton, MA 01720
Telephone: (508) 264-4208, FAX: (508) 635-9407
Complete information source for EMC: publications and annual design handbook, bi-monthly seminars, international standards and documentation.

EATON CORPORATION, Electronic Instrumentation Division, 5340 Alla Road, Los Angeles, CA 90066
Telephone: (213) 822-3061, TWX: 910-343-6969
EMI/EMS measurement instrumentation; computer-controlled systems for MIL/FCC/CISPR/VDE requirements, shielded enclosure leak detection system.

ELECTRO-METRICS, Division of Penril Corp., 100 Church Street, Amsterdam, NY 12010
Telephone: (518) 843-2600
EMI analyzer/receivers, computer control EMISS/SUSC Systems, TEMPEST, ESD, testing/consulting services.

FAIR-RITE PRODUCTS CORP., P.O. Box J, 2 Commercial Row, Wallkill, NY 12589
Telephone: (914) 895-2055, FAX: (914) 895-2629, TWX: 510-249-4819
Ferrite EMI suppressor elements for cables, ferrite beads on leads for circuit board insertion, ferrite beads for surface mount technology, ferrite sleeves for filter pin connectors.

GENISCO TECHNOLOGY CORPORATION, 18435 Susana Road, Rancho Dominguez, CA 90221
Telephone: (213) 537-4750, TWX: 910-346-6733, FAX: (213) 631-0674
EMI filters and EMI testing: MIL-STD-461, RTCA DO-160, etc. 200 V/m RS03, 10 kHz-40 GHz. Remote site testing. EMC consulting and computer analysis.

HONEYWELL INC., Signal Analysis Center, Annapolis, MD; Eatontown, NJ; and San Antonio, TX
Telephone: (301) 266-1700
Complete services for EMI/EMC/TEMPEST, system design and integration.

INSTRUMENTS FOR INDUSTRY, INC., 731 Union Parkway, Ronkonkoma, NY 11779
Telephone: (516) 467-8400, FAX: (516) 467-8558
Anechoic shielded rooms, turnkey systems, EMC/susceptibility measurement systems, broad-band amplifiers, leveling pre-amps, TEM cells, E-field sensors up to 40 GHz, radiation hazard monitors, E-field generating antennas.

LECTROMAGNETICS, INC., 6056 W. Jefferson Boulevard, Los Angeles, CA 90016
Telephone: (800) 325-9814, (213) 870-9383
RF shielded enclosures, modular, prefabricated & all welded, RFI/EMI power line filters, signal line filters. RF shielded anechoic chambers.

MAXWELL LABORATORIES, INC. - MAXWELL/ELGAL, 8888 Balboa Avenue, San Diego, CA 92123
Telephone: (619) 576-3737, FAX: (619) 277-6754
Products, consulting, testing, and training for all electromagnetic disciplines and technologies.

OMEGA SHIELDING PRODUCTS, 1384 Pompton Avenue, Cedar Grove, NJ 07009
Telephone: (201) 890-7455, FAX: (201) 890-9714
EMI/EMP/ESD shielding materials, gaskets and contact strip both standard and custom designed.

PATTON & ASSOCIATES, INC., 4718 West El Caminito Drive, Glendale, AZ 85302
Telephone: (602) 934-5458, FAX: (602) 242-7700
Worldwide TELECOMMUNICATIONS design assistance, consultation, and product submittal.

R & B ENTERPRISES, 20 Clipper Road, West Conshohocken, PA 19428
Telephone: (215) 825-1960, TWX: 510-660-8120, FAX: (215) 825-1684
EMI testing/consulting. Full-threat EMP simulation. EMC training/publications. EMP test equipment

RADIATION SCIENCES, INC., 3131 Detweiler Road, Harleysville, PA 19438
Telephone: (215) 256-4133
TEMPEST/EMI/EMC/FCC; full engineering and support services: testing, design, documentation.

SPECTRUM CONTROL, INC., 2185 West 8th Street, Erie, PA 16505
Telephone: (814) 445-0966, FAX: (814) 455-2550
Complete EMC, FCC/MIL consulting, testing, repair, mfr. RFI filters, RFI gaskets, D-subminiature connectors. Surface mounted devices: chip capacitors, capacitor networks, HIC and QUAD fastbus line drivers.

TECKNIT, Inc., a TWP Company, 129 Dermody Street, Cranford, NJ 07016
Telephone: (201) 272-5500
EMI/EMP/ESD shielding materials, gaskets, vent panels, windows, and conductive coatings and adhesives.

UNIVERSAL SHIELDING CORPORATION, 20 West Jefryn Boulevard, Deer Park, NY 11729
Telephone: (516) 667-7900, FAX: (516) 667-7912
RF shielded enclosures, modular & prefabricated, RFI/EMI power & signal line filters, RF waveguide air vents.

An Institutional Listing recognizes contributions to support the publication of the IEEE NEWSLETTER and TRANSACTIONS ON ELECTROMAGNETIC COMPATIBILITY. Minimum rates are $75.00 for listing in one issue; $200.00 for four consecutive issues. Larger contributions will be most welcome. No agency fee is granted for soliciting such contributions. Inquiries, or contributions made payable to the IEEE, plus instructions on how you wish your Institutional Listing to appear, should be sent to M. Bonaviso, The Institute of Electrical and Electronics Engineers, Inc., 345 East 47th Street, New York, NY 10017.